FCC Exam Element 2 Question Pool for Technician Class

Effective 7/01/2018-6/30/2022

SUBELEMENT T1 – FCC Rules, descriptions, and definitions for the Amateur Radio Service, operator and station license responsibilities - [6 Exam Questions - 6 Groups]

T1A - Amateur Radio Service: purpose and permissible use of the Amateur Radio Service, operator/primary station license grant; Meanings of basic terms used in FCC rules; Interference; RACES rules; Phonetics; Frequency Coordinator

T1A01 (C) [97.1]
Which of the following is a purpose of the Amateur Radio Service as stated in the FCC rules and regulations?
C. Advancing skills in the technical and communication phases of the radio art

T1A02 (C) [97.1]
Which agency regulates and enforces the rules for the Amateur Radio Service in the United States?
C. The FCC

T1A03 (D) [97.119(b)(2)]
What are the FCC rules regarding the use of a phonetic alphabet for station identification in the Amateur Radio Service?
D. It is encouraged

T1A04 (A) [97.5(b)(1)]
How many operator/primary station license grants may be held by any one person?
A. One

T1A05 (C) [97.7]
What is proof of possession of an FCC-issued operator/primary license grant?
C. The control operator's operator/primary station license must appear in the FCC ULS consolidated licensee database

T1A06 (C) [97.3(a)(9)]
What is the FCC Part 97 definition of a beacon?
C. An amateur station transmitting communications for the purposes of observing propagation or related experimental activities

T1A07 (C) [97.3(a)(41)]
What is the FCC Part 97 definition of a space station?
C. An amateur station located more than 50 km above the Earth's surface

T1A08 (B) [97.3(a)(22)]
Which of the following entities recommends transmit/receive channels and other parameters for auxiliary and repeater stations?
B. Volunteer Frequency Coordinator recognized by local amateurs

T1A09 (C) [97.3(a)(22)]
Who selects a Frequency Coordinator?

C. Amateur operators in a local or regional area whose stations are eligible to be repeater or auxiliary stations

T1A10 (D) [97.3(a)(38), 97.407]
Which of the following describes the Radio Amateur Civil Emergency Service (RACES)?
A. A radio service using amateur frequencies for emergency management or civil defense communications
B. A radio service using amateur stations for emergency management or civil defense communications
C. An emergency service using amateur operators certified by a civil defense organization as being enrolled in that organization
D. All of these choices are correct

T1A11 (B) [97.101 (d)]
When is willful interference to other amateur radio stations permitted?
B. At no time

T1B - Authorized frequencies: frequency allocations; ITU; emission modes; restricted sub-bands; spectrum sharing; transmissions near band edges; contacting the International Space Station; power output

T1B01 (B)
What is the International Telecommunications Union (ITU)?
B. A United Nations agency for information and communication technology issues

T1B02 (B) [97.301, 97.207(c)]
Which amateur radio stations may make contact with an amateur radio station on the International Space Station (ISS) using 2 meter and 70 cm band frequencies?
B. Any amateur holding a Technician or higher-class license

T1B03 (B) [97.301(a)]
Which frequency is within the 6 meter amateur band?
B. 52.525 MHz

T1B04 (A) [97.301(a)]
Which amateur band are you using when your station is transmitting on 146.52 MHz?
A. 2 meter band

T1B05 (B) [97.305(c)]
What is the limitation for emissions on the frequencies between 219 and 220 MHz?
B. Fixed digital message forwarding systems only

T1B06 (B) [97.301(e), 97.305]
On which HF bands does a Technician class operator have phone privileges?
B. 10 meter band only

T1B07 (A) [97.305(a), (c)]
Which of the following VHF/UHF frequency ranges are limited to CW only?
A. 50.0 MHz to 50.1 MHz and 144.0 MHz to 144.1 MHz

T1B08 (A) [97.303]
Which of the following is a result of the fact that the Amateur Radio Service is secondary in all or portions of some amateur bands (such as portions of the 70 cm band)?
A. U.S. amateurs may find non-amateur stations in those portions, and must avoid interfering with them

T1B09 (D) [97.101(a), 97.301(a-e)]
Why should you not set your transmit frequency to be exactly at the edge of an amateur band or sub-band?
A. To allow for calibration error in the transmitter frequency display
B. So that modulation sidebands do not extend beyond the band edge
C. To allow for transmitter frequency drift
D. All of these choices are correct

T1B10 (D) [97.301(e), 97.305(c)]
Which of the following HF bands have frequencies available to the Technician class operator for RTTY and data transmissions?
D. 10 meter band only

T1B11 (A) [97.313]
What is the maximum peak envelope power output for Technician class operators using their assigned portions of the HF bands?
A. 200 watts

T1B12 (D) [97.313(b)]
Except for some specific restrictions, what is the maximum peak envelope power output for Technician class operators using frequencies above 30 MHz?
D. 1500 watts

T1C - Operator licensing: operator classes; sequential and vanity call sign systems; international communications; reciprocal operation; places where the Amateur Radio Service is regulated by the FCC; name and address on FCC license database; license term; renewal; grace period

T1C01 (D) [97.9(a), 97.17(a)]
For which license classes are new licenses currently available from the FCC?
D. Technician, General, Amateur Extra

T1C02 (D) [97.19]
Who may select a desired call sign under the vanity call sign rules?
D. Any licensed amateur

T1C03 (A) [97.117]
What types of international communications is an FCC-licensed amateur radio station permitted to make?
A. Communications incidental to the purposes of the Amateur Radio Service and remarks of a personal character

T1C04 (A) [97.107]
When are you allowed to operate your amateur station in a foreign country?
A. When the foreign country authorizes it

T1C05 (A)
Which of the following is a valid call sign for a Technician class amateur radio station?
A. K1XXX

T1C06 (D) [97.5(a)(2)]
From which of the following locations may an FCC-licensed amateur station transmit?
D. From any vessel or craft located in international waters and documented or registered in the United States

T1C07 (B) [97.23]
What may result when correspondence from the FCC is returned as undeliverable because the grantee failed to provide and maintain a correct mailing address with the FCC?
B. Revocation of the station license or suspension of the operator license

T1C08 (C) [97.25]
What is the normal term for an FCC-issued primary station/operator amateur radio license grant?
C. Ten years

T1C09 (A) [97.21(a)(b)]
What is the grace period following the expiration of an amateur license within which the license may be renewed?
A. Two years

T1C10 (C) [97.5a]
How soon after passing the examination for your first amateur radio license may you operate a transmitter on an Amateur Radio Service frequency?
C. As soon as your operator/station license grant appears in the FCC's license database

T1C11 (A) [97.21(b)]
If your license has expired and is still within the allowable grace period, may you continue to operate a transmitter on Amateur Radio Service frequencies?
A. No, transmitting is not allowed until the FCC license database shows that the license has been renewed

T1D - Authorized and prohibited transmission: communications with other countries; music; exchange of information with other services; indecent language; compensation for use of station; retransmission of other amateur signals; codes and ciphers; sale of equipment; unidentified transmissions; one-way transmission

T1D01 (A) [97.111(a)(1)]
With which countries are FCC-licensed amateur radio stations prohibited from exchanging communications?
A. Any country whose administration has notified the International Telecommunications Union (ITU) that it objects to such communications

T1D02 (B) [97.113(b),97.111(b)]
Under which of the following circumstances may an amateur radio station make one-way transmissions?
B. When transmitting code practice, information bulletins, or transmissions necessary to provide emergency communications

T1D03 (C) [97.211(b), 97.215(b), 97.114(a)(4)]
When is it permissible to transmit messages encoded to hide their meaning?
C. Only when transmitting control commands to space stations or radio control craft

T1D04 (A) [97.113(a)(4), 97.113(c)]
Under what conditions is an amateur station authorized to transmit music using a phone emission?
A. When incidental to an authorized retransmission of manned spacecraft communications

T1D05 (A) [97.113(a)(3)(ii)]
When may amateur radio operators use their stations to notify other amateurs of the availability of equipment for sale or trade?
A. When the equipment is normally used in an amateur station and such activity is not conducted on a regular basis

T1D06 (B) [97.113(a)(4)]
What, if any, are the restrictions concerning transmission of language that may be considered indecent or obscene?
B. Any such language is prohibited

T1D07 (B) [97.113(d)]
What types of amateur stations can automatically retransmit the signals of other amateur stations?
B. Repeater, auxiliary, or space stations

T1D08 (B) [97.113(a)(3)(iii)]
In which of the following circumstances may the control operator of an amateur station receive compensation for operating that station?
B. When the communication is incidental to classroom instruction at an educational institution

T1D09 (A) [97.113(5)(b)]
Under which of the following circumstances are amateur stations authorized to transmit signals related to broadcasting, program production, or news gathering, assuming no other means is available?
A. Only where such communications directly relate to the immediate safety of human life or protection of property

T1D10 (D) [97.3(a)(10)]
What is the meaning of the term broadcasting in the FCC rules for the Amateur Radio Service?
D. Transmissions intended for reception by the general public

T1D11 (D) [97.119(a)]
When may an amateur station transmit without on-the-air identification?
D. When transmitting signals to control model craft

T1E - Control operator and control types: control operator required; eligibility; designation of control operator; privileges and duties; control point; local, automatic and remote control; location of control operator

T1E01 (D) [97.7(a)]
When is an amateur station permitted to transmit without a control operator?
D. Never

T1E02 (D) [97.301, 97.207(c)]
Who may be the control operator of a station communicating through an amateur satellite or space station?
D. Any amateur whose license privileges allow them to transmit on the satellite uplink frequency

T1E03 (A) [97.103(b)]
Who must designate the station control operator?
A. The station licensee

T1E04 (D) [97.103(b)]
What determines the transmitting privileges of an amateur station?
D. The class of operator license held by the control operator

T1E05 (C) [97.3(a)(14)]
What is an amateur station control point?
C. The location at which the control operator function is performed

T1E06 (A) [97.301]
When, under normal circumstances, may a Technician class licensee be the control operator of a station operating in an exclusive Amateur Extra class operator segment of the amateur bands?
A. At no time

T1E07 (D) [97.103(a)]
When the control operator is not the station licensee, who is responsible for the proper operation of the station?
D. The control operator and the station licensee are equally responsible

T1E08 (A) [97.3(a)(6), 97.205(d)]
Which of the following is an example of automatic control?
A. Repeater operation

T1E09 (D) [97.109(c)]
Which of the following is true of remote control operation?
A. The control operator must be at the control point
B. A control operator is required at all times
C. The control operator indirectly manipulates the controls
D. All of these choices are correct

T1E10 (B) [97.3(a)(39)]
Which of the following is an example of remote control as defined in Part 97?
B. Operating the station over the internet

T1E11 (D) [97.103(a)]
Who does the FCC presume to be the control operator of an amateur station, unless documentation to the contrary is in the station records?
D. The station licensee

T1F - Station identification; repeaters; third-party communications; club stations; FCC inspection

T1F01 (B) [97.103(c)]
When must the station licensee make the station and its records available for FCC inspection?
B. At any time upon request by an FCC representative

T1F02 (C) [97.119 (a)]
When using tactical identifiers such as “Race Headquarters” during a community service net operation, how often must your station transmit the station’s FCC-assigned call sign?
C. At the end of each communication and every ten minutes during a communication

T1F03 (D) [97.119(a)]
When is an amateur station required to transmit its assigned call sign?
D. At least every 10 minutes during and at the end of a communication

T1F04 (C) [97.119(b)(2)]
Which of the following is an acceptable language to use for station identification when operating in a phone sub-band?
C. The English language

T1F05 (B) [97.119(b)(2)]
What method of call sign identification is required for a station transmitting phone signals?
B. Send the call sign using a CW or phone emission

T1F06 (D) [97.119(c)]
Which of the following formats of a self-assigned indicator is acceptable when identifying using a phone transmission?
A. KL7CC stroke W3
B. KL7CC slant W3
C. KL7CC slash W3
D. All of these choices are correct

T1F07 (B) [97.115(a)(2)]
Which of the following restrictions apply when a non-licensed person is allowed to speak to a foreign station using a station under the control of a Technician class control operator?
B. The foreign station must be one with which the U.S. has a third-party agreement

T1F08 (A) [97.3(a)(47)]
What is meant by the term Third Party Communications?
A. A message from a control operator to another amateur station control operator on behalf of another person

T1F09 (C) [97.3(a)(40)]
What type of amateur station simultaneously retransmits the signal of another amateur station on a different channel or channels?
C. Repeater station

T1F10 (A) [97.205(g)]
Who is accountable should a repeater inadvertently retransmit communications that violate the FCC rules?
A. The control operator of the originating station

T1F11 (B) [97.5(b)(2)]
Which of the following is a requirement for the issuance of a club station license grant?
B. The club must have at least four members

SUBELEMENT T2 - Operating Procedures - [3 Exam Questions - 3 Groups]

T2A - Station operation: choosing an operating frequency; calling another station; test transmissions; procedural signs; use of minimum power; choosing an operating frequency; band plans; calling frequencies; repeater offsets

T2A01 (B)
Which of the following is a common repeater frequency offset in the 2 meter band?
B. Plus or minus 600 kHz

T2A02 (A)
What is the national calling frequency for FM simplex operations in the 2 meter band?
A. 146.520 MHz

T2A03 (A)
What is a common repeater frequency offset in the 70 cm band?
A. Plus or minus 5 MHz

T2A04 (B)
What is an appropriate way to call another station on a repeater if you know the other station's call sign?
B. Say the station's call sign, then identify with your call sign

T2A05 (C)
How should you respond to a station calling CQ?
C. Transmit the other station's call sign followed by your call sign

T2A06 (A)
Which of the following is required when making on-the-air test transmissions?
A. Identify the transmitting station

T2A07 (A)
What is meant by "repeater offset?"
A. The difference between a repeater's transmit frequency and its receive frequency

T2A08 (D)
What is the meaning of the procedural signal "CQ"?
D. Calling any station

T2A09 (B)
What brief statement indicates that you are listening on a repeater and looking for a contact?
B. Your call sign

T2A10 (A)
What is a band plan, beyond the privileges established by the FCC?
A. A voluntary guideline for using different modes or activities within an amateur band

T2A11 (C)
What term describes an amateur station that is transmitting and receiving on the same frequency?
C. Simplex

T2A12 (D)
Which of the following is a guideline when choosing an operating frequency for calling CQ?
A. Listen first to be sure that no one else is using the frequency
B. Ask if the frequency is in use
C. Make sure you are in your assigned band
D. All of these choices are correct

T2B – VHF/UHF operating practices: SSB phone; FM repeater; simplex; splits and shifts; CTCSS; DTMF; tone squelch; carrier squelch; phonetics; operational problem resolution; Q signals

T2B01 (C)
What is the most common use of the "reverse split" function of a VHF/UHF transceiver?
C. Listen on a repeater's input frequency

T2B02 (D)
What term describes the use of a sub-audible tone transmitted along with normal voice audio to open the squelch of a receiver?
D. CTCSS

T2B03 (B)
If a station is not strong enough to keep a repeater's receiver squelch open, which of the following might allow you to receive the station's signal?
B. Listen on the repeater input frequency

T2B04 (D)
Which of the following could be the reason you are unable to access a repeater whose output you can hear?
A. Improper transceiver offset
B. The repeater may require a proper CTCSS tone from your transceiver
C. The repeater may require a proper DCS tone from your transceiver
D. All of these choices are correct

T2B05 (C)
What might be the problem if a repeater user says your transmissions are breaking up on voice peaks?
C. You are talking too loudly

T2B06 (A)
What type of tones are used to control repeaters linked by the Internet Relay Linking Project (IRLP) protocol?
A. DTMF

T2B07 (C)
How can you join a digital repeater's "talk group"?
C. Program your radio with the group's ID or code

T2B08 (A)
Which of the following applies when two stations transmitting on the same frequency interfere with each other?
A. Common courtesy should prevail, but no one has absolute right to an amateur frequency

T2B09 (B)
What is a "talk group" on a DMR digital repeater?
B. A way for groups of users to share a channel at different times without being heard by other users on the channel

T2B10 (A)
Which Q signal indicates that you are receiving interference from other stations?
A. QRM

T2B11 (B)
Which Q signal indicates that you are changing frequency?
B. QSY

T2B12 (A)
Why are simplex channels designated in the VHF/UHF band plans?
A. So that stations within mutual communications range can communicate without tying up a repeater

T2B13 (C)
Where may SSB phone be used in amateur bands above 50 MHz?
C. In at least some portion of all these bands

T2B14 (A)
Which of the following describes a linked repeater network?
A. A network of repeaters where signals received by one repeater are repeated by all the repeaters

T2C – Public service: emergency and non-emergency operations; applicability of FCC rules; RACES and ARES; net and traffic procedures; operating restrictions during emergencies

T2C01 (D) [97.103(a)]
When do the FCC rules NOT apply to the operation of an amateur station?
D. Never, FCC rules always apply

T2C02 (B)
What is meant by the term "NCS" used in net operation?
B. Net Control Station

T2C03 (C)
What should be done when using voice modes to ensure that voice messages containing unusual words are received correctly?
C. Spell the words using a standard phonetic alphabet

T2C04 (D)
What do RACES and ARES have in common?
D. Both organizations may provide communications during emergencies

T2C05 (A)
What does the term “traffic” refer to in net operation?
A. Formal messages exchanged by net stations

T2C06 (C)
Which of the following is an accepted practice to get the immediate attention of a net control station when reporting an emergency?
C. Begin your transmission by saying "Priority" or "Emergency" followed by your call sign

T2C07 (C)
Which of the following is an accepted practice for an amateur operator who has checked into a net?
C. Remain on frequency without transmitting until asked to do so by the net control station

T2C08 (A)
Which of the following is a characteristic of good traffic handling?
A. Passing messages exactly as received

T2C09 (D)
Are amateur station control operators ever permitted to operate outside the frequency privileges of their license class?
D. Yes, but only if necessary in situations involving the immediate safety of human life or protection of property

T2C10 (D)
What information is contained in the preamble of a formal traffic message?
D. The information needed to track the message

T2C11 (A)
What is meant by the term “check,” in reference to a formal traffic message?
A. The number of words or word equivalents in the text portion of the message

T2C12 (A)
What is the Amateur Radio Emergency Service (ARES)?
A. Licensed amateurs who have voluntarily registered their qualifications and equipment for communications duty in the public service

SUBELEMENT T3 – Radio wave characteristics: properties of radio waves; propagation modes – [3 Exam Questions - 3 Groups]

T3A - Radio wave characteristics: how a radio signal travels; fading; multipath; polarization; wavelength vs absorption; antenna orientation

T3A01 (D)
What should you do if another operator reports that your station's 2 meter signals were strong just a moment ago, but now they are weak or distorted?
D. Try moving a few feet or changing the direction of your antenna if possible, as reflections may be causing multi-path distortion

T3A02 (B)
Why might the range of VHF and UHF signals be greater in the winter?
B. Less absorption by vegetation

T3A03 (C)
What antenna polarization is normally used for long-distance weak-signal CW and SSB contacts using the VHF and UHF bands?
C. Horizontal

T3A04 (B)
What can happen if the antennas at opposite ends of a VHF or UHF line of sight radio link are not using the same polarization?
B. Signals could be significantly weaker

T3A05 (B)
When using a directional antenna, how might your station be able to access a distant repeater if buildings or obstructions are blocking the direct line of sight path?
B. Try to find a path that reflects signals to the repeater

T3A06 (B)
What term is commonly used to describe the rapid fluttering sound sometimes heard from mobile stations that are moving while transmitting?
B. Picket fencing

T3A07 (A)
What type of wave carries radio signals between transmitting and receiving stations?
A. Electromagnetic

T3A08 (C)
Which of the following is a likely cause of irregular fading of signals received by ionospheric reflection?
C. Random combining of signals arriving via different paths

T3A09 (B)
Which of the following results from the fact that skip signals refracted from the ionosphere are elliptically polarized?
B. Either vertically or horizontally polarized antennas may be used for transmission or reception

T3A10 (D)
What may occur if data signals arrive via multiple paths?
D. Error rates are likely to increase

T3A11 (C)
Which part of the atmosphere enables the propagation of radio signals around the world?
C. The ionosphere

T3A12 (B)
How might fog and light rain affect radio range on the 10 meter and 6 meter bands?
B. Fog and light rain will have little effect on these bands

T3A13 (C)
What weather condition would decrease range at microwave frequencies?
C. Precipitation

T3B - Radio and electromagnetic wave properties: the electromagnetic spectrum; wavelength vs frequency; nature and velocity of electromagnetic waves; definition of UHF, VHF, HF bands; calculating wavelength

T3B01 (C)
What is the name for the distance a radio wave travels during one complete cycle?
C. Wavelength

T3B02 (A)
What property of a radio wave is used to describe its polarization?
A. The orientation of the electric field

T3B03 (C)
What are the two components of a radio wave?
C. Electric and magnetic fields

T3B04 (A)
How fast does a radio wave travel through free space?
A. At the speed of light

T3B05 (B)
How does the wavelength of a radio wave relate to its frequency?
B. The wavelength gets shorter as the frequency increases

T3B06 (D)
What is the formula for converting frequency to approximate wavelength in meters?
D. Wavelength in meters equals 300 divided by frequency in megahertz

T3B07 (A)
What property of radio waves is often used to identify the different frequency bands?
A. The approximate wavelength

T3B08 (B)
What are the frequency limits of the VHF spectrum?
B. 30 to 300 MHz

T3B09 (D)
What are the frequency limits of the UHF spectrum?
D. 300 to 3000 MHz

T3B10 (C)
What frequency range is referred to as HF?
C. 3 to 30 MHz

T3B11 (B)
What is the approximate velocity of a radio wave as it travels through free space?
B. 300,000,000 meters per second

T3C - Propagation modes: line of sight; sporadic E; meteor and auroral scatter and reflections; tropospheric ducting; F layer skip; radio horizon

T3C01 (C)
Why are direct (not via a repeater) UHF signals rarely heard from stations outside your local coverage area?
C. UHF signals are usually not reflected by the ionosphere

T3C02 (C)
Which of the following is an advantage of HF vs VHF and higher frequencies?
C. Long distance ionospheric propagation is far more common on HF

T3C03 (B)
What is a characteristic of VHF signals received via auroral reflection?
B. The signals exhibit rapid fluctuations of strength and often sound distorted

T3C04 (B)
Which of the following propagation types is most commonly associated with occasional strong over-the-horizon signals on the 10, 6, and 2 meter bands?
B. Sporadic E

T3C05 (A)
Which of the following effects might cause radio signals to be heard despite obstructions between the transmitting and receiving stations?
A. Knife-edge diffraction

T3C06 (A)
What mode is responsible for allowing over-the-horizon VHF and UHF communications to ranges of approximately 300 miles on a regular basis?
A. Tropospheric ducting

T3C07 (B)
What band is best suited for communicating via meteor scatter?
B. 6 meter band

T3C08 (D)
What causes tropospheric ducting?
D. Temperature inversions in the atmosphere

T3C09 (A)
What is generally the best time for long-distance 10 meter band propagation via the F layer?
A. From dawn to shortly after sunset during periods of high sunspot activity

T3C10 (A)
Which of the following bands may provide long distance communications during the peak of the sunspot cycle?

A. 6 or 10 meter bands

T3C11 (C)
Why do VHF and UHF radio signals usually travel somewhat farther than the visual line of sight distance between two stations?
C. The Earth seems less curved to radio waves than to light

SUBELEMENT T4 - Amateur radio practices and station set-up – [2 Exam Questions - 2 Groups]

T4A – Station setup: connecting microphones; reducing unwanted emissions; power source; connecting a computer; RF grounding; connecting digital equipment; connecting an SWR meter

T4A01 (D)
What must be considered to determine the minimum current capacity needed for a transceiver power supply?
A. Efficiency of the transmitter at full power output
B. Receiver and control circuit power
C. Power supply regulation and heat dissipation
D. All of these choices are correct

T4A02 (D)
How might a computer be used as part of an amateur radio station?
A. For logging contacts and contact information
B. For sending and/or receiving CW
C. For generating and decoding digital signals
D. All of these choices are correct

T4A03 (A)
Why should wiring between the power source and radio be heavy-gauge wire and kept as short as possible?
A. To avoid voltage falling below that needed for proper operation

T4A04 (C)
Which computer sound card port is connected to a transceiver's headphone or speaker output for operating digital modes?
C. Microphone or line input

T4A05 (A)
What is the proper location for an external SWR meter?
A. In series with the feed line, between the transmitter and antenna

T4A06 (C)
Which of the following connections might be used between a voice transceiver and a computer for digital operation?
C. Receive audio, transmit audio, and push-to-talk (PTT)

T4A07 (C)
How is a computer's sound card used when conducting digital communications?
C. The sound card provides audio to the radio's microphone input and converts received audio to digital form

T4A08 (D)
Which of the following conductors provides the lowest impedance to RF signals?
D. Flat strap

T4A09 (D)
Which of the following could you use to cure distorted audio caused by RF current on the shield of a microphone cable?
D. Ferrite choke

T4A10 (B)
What is the source of a high-pitched whine that varies with engine speed in a mobile transceiver's receive audio?
B. The alternator

T4A11 (A)
Where should the negative return connection of a mobile transceiver's power cable be connected?
A. At the battery or engine block ground strap

T4B - Operating controls: tuning; use of filters; squelch function; AGC; transceiver operation; memory channels

T4B01 (B)
What may happen if a transmitter is operated with the microphone gain set too high?
B. The output signal might become distorted

T4B02 (A)
Which of the following can be used to enter the operating frequency on a modern transceiver?
A. The keypad or VFO knob

T4B03 (D)
What is the purpose of the squelch control on a transceiver?
D. To mute receiver output noise when no signal is being received

T4B04 (B)
What is a way to enable quick access to a favorite frequency on your transceiver?
B. Store the frequency in a memory channel

T4B05 (C)
Which of the following would reduce ignition interference to a receiver?
C. Turn on the noise blanker

T4B06 (D)
Which of the following controls could be used if the voice pitch of a single-sideband signal seems too high or low?
D. The receiver RIT or clarifier

T4B07 (B)
What does the term "RIT" mean?
B. Receiver Incremental Tuning

T4B08 (B)
What is the advantage of having multiple receive bandwidth choices on a multimode transceiver?
B. Permits noise or interference reduction by selecting a bandwidth matching the mode

T4B09 (C)
Which of the following is an appropriate receive filter bandwidth for minimizing noise and interference for SSB reception?

C. 2400 Hz

T4B10 (A)
Which of the following is an appropriate receive filter bandwidth for minimizing noise and interference for CW reception?
A. 500 Hz

T4B11 (A)
What is the function of automatic gain control, or AGC?
A. To keep received audio relatively constant

T4B12 (B)
Which of the following could be used to remove power line noise or ignition noise?
B. Noise blanker

T4B13 (C)
Which of the following is a use for the scanning function of an FM transceiver?
C. To scan through a range of frequencies to check for activity

SUBELEMENT T5 – Electrical principles: math for electronics; electronic principles; Ohm's Law – [4 Exam Questions - 4 Groups]

T5A - Electrical principles, units, and terms: current and voltage; conductors and insulators; alternating and direct current; series and parallel circuits

T5A01 (D)
Electrical current is measured in which of the following units?
D. Amperes

T5A02 (B)
Electrical power is measured in which of the following units?
B. Watts

T5A03 (D)
What is the name for the flow of electrons in an electric circuit?
D. Current

T5A04 (B)
What is the name for a current that flows only in one direction?
B. Direct current

T5A05 (A)
What is the electrical term for the electromotive force (EMF) that causes electron flow?
A. Voltage

T5A06 (A)
How much voltage does a mobile transceiver typically require?
A. About 12 volts

T5A07 (C)
Which of the following is a good electrical conductor?
C. Copper

T5A08 (B)
Which of the following is a good electrical insulator?
B. Glass

T5A09 (A)
What is the name for a current that reverses direction on a regular basis?
A. Alternating current

T5A10 (C)
Which term describes the rate at which electrical energy is used?
C. Power

T5A11 (A)
What is the unit of electromotive force?
A. The volt

T5A12 (D)
What describes the number of times per second that an alternating current makes a complete cycle?
D. Frequency

T5A13 (A)
In which type of circuit is current the same through all components?
A. Series

T5A14 (B)
In which type of circuit is voltage the same across all components?
B. Parallel

T5B - Math for electronics: conversion of electrical units; decibels; the metric system

T5B01 (C)
How many milliamperes is 1.5 amperes?
C. 1500 milliamperes

T5B02 (A)
What is another way to specify a radio signal frequency of 1,500,000 hertz?
A. 1500 kHz

T5B03 (C)
How many volts are equal to one kilovolt?
C. One thousand volts

T5B04 (A)
How many volts are equal to one microvolt?
A. One one-millionth of a volt

T5B05 (B)
Which of the following is equal to 500 milliwatts?
B. 0.5 watts

T5B06 (C)
If an ammeter calibrated in amperes is used to measure a 3000-milliampere current, what reading would it show?
B. 0.3 amperes

T5B07 (C)
If a frequency display calibrated in megahertz shows a reading of 3.525 MHz, what would it show if it were calibrated in kilohertz?
C. 3525 kHz

T5B08 (B)
How many microfarads are equal to 1,000,000 picofarads?
B. 1 microfarad

T5B09 (B)
What is the approximate amount of change, measured in decibels (dB), of a power increase from 5 watts to 10 watts?
B. 3 dB

T5B10 (C)
What is the approximate amount of change, measured in decibels (dB), of a power decrease from 12 watts to 3 watts?
C. -6 dB

T5B11 (A)
What is the amount of change, measured in decibels (dB), of a power increase from 20 watts to 200 watts?
A. 10 dB

T5B12 (A)
Which of the following frequencies is equal to 28,400 kHz?
A. 28.400 MHz

T5B13 (C)
If a frequency display shows a reading of 2425 MHz, what frequency is that in GHz?
C. 2.425 GHz

T5C - Electronic principles: capacitance; inductance; current flow in circuits; alternating current; definition of RF; definition of polarity; DC power calculations; impedance

T5C01 (D)
What is the ability to store energy in an electric field called?
D. Capacitance

T5C02 (A)
What is the basic unit of capacitance?
A. The farad

T5C03 (D)
What is the ability to store energy in a magnetic field called?
D. Inductance

T5C04 (C)
What is the basic unit of inductance?
C. The henry

T5C05 (A)
What is the unit of frequency?
A. Hertz

T5C06 (A)
What does the abbreviation “RF” refer to?
A. Radio frequency signals of all types

T5C07 (B)
A radio wave is made up of what type of energy?
B. Electromagnetic

T5C08 (A)
What is the formula used to calculate electrical power in a DC circuit?
A. Power (P) equals voltage (E) multiplied by current (I)

T5C09 (A)
How much power is being used in a circuit when the applied voltage is 13.8 volts DC and the current is 10 amperes?
A. 138 watts

T5C10 (B)
How much power is being used in a circuit when the applied voltage is 12 volts DC and the current is 2.5 amperes?
B. 30 watts

T5C11 (B)
How many amperes are flowing in a circuit when the applied voltage is 12 volts DC and the load is 120 watts?
B. 10 amperes

T5C12 (A)
What is impedance?
A. A measure of the opposition to AC current flow in a circuit

T5C13 (D)
What is a unit of impedance?
D. Ohms

T5C14 (D)
What is the proper abbreviation for megahertz?
D. MHz

T5D – Ohm’s Law: formulas and usage; components in series and parallel

T5D01 (B)
What formula is used to calculate current in a circuit?
B. Current (I) equals voltage (E) divided by resistance (R)
~~

T5D02 (A)
What formula is used to calculate voltage in a circuit?
A. Voltage (E) equals current (I) multiplied by resistance (R)

T5D03 (B)
What formula is used to calculate resistance in a circuit?
B. Resistance (R) equals voltage (E) divided by current (I)

T5D04 (B)
What is the resistance of a circuit in which a current of 3 amperes flows through a resistor connected to 90 volts?
B. 30 ohms

T5D05 (C)
What is the resistance in a circuit for which the applied voltage is 12 volts and the current flow is 1.5 amperes?
C. 8 ohms

T5D06 (A)
What is the resistance of a circuit that draws 4 amperes from a 12-volt source?
A. 3 ohms

T5D07 (D)
What is the current in a circuit with an applied voltage of 120 volts and a resistance of 80 ohms?
D. 1.5 amperes

T5D08 (C)
What is the current through a 100-ohm resistor connected across 200 volts?
C. 2 amperes

T5D09 (C)
What is the current through a 24-ohm resistor connected across 240 volts?
C. 10 amperes

T5D10 (A)
What is the voltage across a 2-ohm resistor if a current of 0.5 amperes flows through it?
A. 1 volt

T5D11 (B)
What is the voltage across a 10-ohm resistor if a current of 1 ampere flows through it?
B. 10 volts

T5D12 (D)
What is the voltage across a 10-ohm resistor if a current of 2 amperes flows through it?
D. 20 volts

T5D13 (B)
What happens to current at the junction of two components in series?
B. It is unchanged

T5D14 (A)
What happens to current at the junction of two components in parallel?
A. It divides between them dependent on the value of the components

T5D15 (C)
What is the voltage across each of two components in series with a voltage source?
C. It is determined by the type and value of the components

T5D16 (D)
What is the voltage across each of two components in parallel with a voltage source?
D. The same voltage as the source

SUBELEMENT T6 – Electrical components; circuit diagrams; component functions – [4 Exam Questions - 4 Groups]

T6A - Electrical components: fixed and variable resistors; capacitors and inductors; fuses; switches; batteries

T6A01 (B)
What electrical component opposes the flow of current in a DC circuit?
B. Resistor

T6A02 (C)
What type of component is often used as an adjustable volume control?
C. Potentiometer

T6A03 (B)
What electrical parameter is controlled by a potentiometer?
B. Resistance

T6A04 (B)
What electrical component stores energy in an electric field?
B. Capacitor

T6A05 (D)
What type of electrical component consists of two or more conductive surfaces separated by an insulator?
D. Capacitor

T6A06 (C)
What type of electrical component stores energy in a magnetic field?
C. Inductor

T6A07 (D)
What electrical component usually is constructed as a coil of wire?
D. Inductor

T6A08 (B)
What electrical component is used to connect or disconnect electrical circuits?
B. Switch

T6A09 (A)
What electrical component is used to protect other circuit components from current overloads?
A. Fuse

T6A10 (D)
Which of the following battery types is rechargeable?
A. Nickel-metal hydride
B. Lithium-ion
C. Lead-acid gel-cell

D. All of these choices are correct

T6A11 (B)
Which of the following battery types is not rechargeable?
B. Carbon-zinc

T6B – Semiconductors: basic principles and applications of solid state devices; diodes and transistors

T6B01 (D)
What class of electronic components uses a voltage or current signal to control current flow?
D. Transistors

T6B02 (C)
What electronic component allows current to flow in only one direction?
C. Diode

T6B03 (C)
Which of these components can be used as an electronic switch or amplifier?
C. Transistor

T6B04 (B)
Which of the following components can consist of three layers of semiconductor material?
B. Transistor

T6B05 (A)
Which of the following electronic components can amplify signals?
A. Transistor

T6B06 (B)
How is the cathode lead of a semiconductor diode often marked on the package?
B. With a stripe

T6B07 (B)
What does the abbreviation LED stand for?
B. Light Emitting Diode

T6B08 (A)
What does the abbreviation FET stand for?
A. Field Effect Transistor

T6B09 (C)
What are the names of the two electrodes of a diode?
C. Anode and cathode

T6B10 (B)
Which of the following could be the primary gain-producing component in an RF power amplifier?
B. Transistor

T6B11 (A)
What is the term that describes a device's ability to amplify a signal?
A. Gain

T6C01 (C)
What is the name of an electrical wiring diagram that uses standard component symbols?
C. Schematic

T6C02 (A)
What is component 1 in figure T1?
A. Resistor

T6C03 (B)
What is component 2 in figure T1?
B. Transistor

T6C04 (C)
What is component 3 in figure T1?
C. Lamp

T6C05 (C)
What is component 4 in figure T1?
C. Battery

T6C06 (B)
What is component 6 in figure T2?
B. Capacitor

T6C07 (D)
What is component 8 in figure T2?
D. Light emitting diode

T6C08 (C)
What is component 9 in figure T2?
C. Variable resistor

T6C09 (D)
What is component 4 in figure T2?
D. Transformer

T6C10 (D)
What is component 3 in figure T3?
D. Variable inductor

T6C11 (A)
What is component 4 in figure T3?
A. Antenna

T6C12 (A)
What do the symbols on an electrical schematic represent?
A. Electrical components

T6C13 (C)
Which of the following is accurately represented in electrical schematics?

C. The way components are interconnected

T6D - Component functions: rectification; switches; indicators; power supply components; resonant circuit; shielding; power transformers; integrated circuits

T6D01 (B)
Which of the following devices or circuits changes an alternating current into a varying direct current signal?
B. Rectifier

T6D02 (A)
What is a relay?
A. An electrically-controlled switch

T6D03 (A)
What type of switch is represented by component 3 in figure T2?
A. Single-pole single-throw

T6D04 (C)
Which of the following displays an electrical quantity as a numeric value?
C. Meter

T6D05 (A)
What type of circuit controls the amount of voltage from a power supply?
A. Regulator

T6D06 (B)
What component is commonly used to change 120V AC house current to a lower AC voltage for other uses?
B. Transformer

T6D07 (A)
Which of the following is commonly used as a visual indicator?
A. LED

T6D08 (D)
Which of the following is combined with an inductor to make a tuned circuit?
D. Capacitor

T6D09 (C)
What is the name of a device that combines several semiconductors and other components into one package?
C. Integrated circuit

T6D10 (C)
What is the function of component 2 in Figure T1?
C. Control the flow of current

T6D11 (A)
Which of the following is a resonant or tuned circuit?
A. An inductor and a capacitor connected in series or parallel to form a filter

T6D12 (C)
Which of the following is a common reason to use shielded wire?
C. To prevent coupling of unwanted signals to or from the wire

SUBELEMENT T7 – Station equipment: common transmitter and receiver problems; antenna measurements; troubleshooting; basic repair and testing – [4 Exam Questions - 4 Groups]

T7A – Station equipment: receivers; transmitters; transceivers; modulation; transverters; transmit and receive amplifiers

T7A01 (B)
Which term describes the ability of a receiver to detect the presence of a signal?
B. Sensitivity

T7A02 (B)
What is a transceiver?
B. A unit combining the functions of a transmitter and a receiver

T7A03 (B)
Which of the following is used to convert a radio signal from one frequency to another?
B. Mixer

T7A04 (C)
Which term describes the ability of a receiver to discriminate between multiple signals?
C. Selectivity

T7A05 (D)
What is the name of a circuit that generates a signal at a specific frequency?
D. Oscillator

T7A06 (C)
What device converts the RF input and output of a transceiver to another band?
C. Transverter

T7A07 (D)
What is meant by “PTT”?
D. The push-to-talk function that switches between receive and transmit

T7A08 (C)
Which of the following describes combining speech with an RF carrier signal?
C. Modulation

T7A09 (B)
What is the function of the SSB/CW-FM switch on a VHF power amplifier?
B. Set the amplifier for proper operation in the selected mode
band

T7A10 (B)
What device increases the low-power output from a handheld transceiver?
B. An RF power amplifier

T7A11 (A)
Where is an RF preamplifier installed?
A. Between the antenna and receiver

T7B – Common transmitter and receiver problems: symptoms of overload and overdrive; distortion; causes of interference; interference and consumer electronics; part 15 devices; over-modulation; RF feedback; off frequency signals

T7B01 (D)
What can you do if you are told your FM handheld or mobile transceiver is over-deviating?
D. Talk farther away from the microphone

T7B02 (A)
What would cause a broadcast AM or FM radio to receive an amateur radio transmission unintentionally?
A. The receiver is unable to reject strong signals outside the AM or FM band

T7B03 (D)
Which of the following can cause radio frequency interference?
A. Fundamental overload
B. Harmonics
C. Spurious emissions
D. All of these choices are correct

T7B04 (D)
Which of the following is a way to reduce or eliminate interference from an amateur transmitter to a nearby telephone?
D. Put an RF filter on the telephone

T7B05 (A)
How can overload of a non-amateur radio or TV receiver by an amateur signal be reduced or eliminated?
A. Block the amateur signal with a filter at the antenna input of the affected receiver

T7B06 (A)
Which of the following actions should you take if a neighbor tells you that your station's transmissions are interfering with their radio or TV reception?
A. Make sure that your station is functioning properly and that it does not cause interference to your own radio or television when it is tuned to the same channel

T7B07 (D)
Which of the following can reduce overload to a VHF transceiver from a nearby FM broadcast station?
D. Band-reject filter

T7B08 (D)
What should you do if something in a neighbor's home is causing harmful interference to your amateur station?
A. Work with your neighbor to identify the offending device
B. Politely inform your neighbor about the rules that prohibit the use of devices that cause interference
C. Check your station and make sure it meets the standards of good amateur practice
D. All of these choices are correct

T7B09 (A)
What is a Part 15 device?
A. An unlicensed device that may emit low-powered radio signals on frequencies used by a licensed service

T7B10 (D)
What might be a problem if you receive a report that your audio signal through the repeater is distorted or unintelligible?
A. Your transmitter is slightly off frequency
B. Your batteries are running low
C. You are in a bad location

D. All of these choices are correct

T7B11 (C)
What is a symptom of RF feedback in a transmitter or transceiver?
C. Reports of garbled, distorted, or unintelligible voice transmissions

T7B12 (D)
What should be the first step to resolve cable TV interference from your ham radio transmission?
D. Be sure all TV coaxial connectors are installed properly

T7C – Antenna measurements and troubleshooting: measuring SWR; dummy loads; coaxial cables; causes of feed line failures

T7C01 (A)
What is the primary purpose of a dummy load?
A. To prevent transmitting signals over the air when making tests

T7C02 (B)
Which of the following instruments can be used to determine if an antenna is resonant at the desired operating frequency?
B. An antenna analyzer

T7C03 (A)
What, in general terms, is standing wave ratio (SWR)?
A. A measure of how well a load is matched to a transmission line

T7C04 (C)
What reading on an SWR meter indicates a perfect impedance match between the antenna and the feed line?
C. 1 to 1

T7C05 (A)
Why do most solid-state amateur radio transmitters reduce output power as SWR increases?
A. To protect the output amplifier transistors

T7C06 (D)
What does an SWR reading of 4:1 indicate?
D. Impedance mismatch

T7C07 (C)
What happens to power lost in a feed line?
C. It is converted into heat

T7C08 (D)
What instrument other than an SWR meter could you use to determine if a feed line and antenna are properly matched?
D. Directional wattmeter

T7C09 (A)
Which of the following is the most common cause for failure of coaxial cables?
A. Moisture contamination

T7C10 (D)
Why should the outer jacket of coaxial cable be resistant to ultraviolet light?

D. Ultraviolet light can damage the jacket and allow water to enter the cable

T7C11 (C)
What is a disadvantage of air core coaxial cable when compared to foam or solid dielectric types?
C. It requires special techniques to prevent water absorption

T7C12 (B)
What does a dummy load consist of?
B. A non-inductive resistor and a heat sink

T7D – Basic repair and testing: soldering; using basic test instruments; connecting a voltmeter, ammeter, or ohmmeter

T7D01 (B)
Which instrument would you use to measure electric potential or electromotive force?
B. A voltmeter

T7D02 (B)
What is the correct way to connect a voltmeter to a circuit?
B. In parallel with the circuit

T7D03 (A)
How is a simple ammeter connected to a circuit?
A. In series with the circuit

T7D04 (D)
Which instrument is used to measure electric current?
D. An ammeter

T7D05 (D)
What instrument is used to measure resistance?
D. An ohmmeter

T7D06 (C)
Which of the following might damage a multimeter?
C. Attempting to measure voltage when using the resistance setting

T7D07 (D)
Which of the following measurements are commonly made using a multimeter?
D. Voltage and resistance

T7D08 (C)
Which of the following types of solder is best for radio and electronic use?
C. Rosin-core solder

T7D09 (C)
What is the characteristic appearance of a cold solder joint?
C. A grainy or dull surface

T7D10 (B)
What is probably happening when an ohmmeter, connected across an unpowered circuit, initially indicates a low resistance and then shows increasing resistance with time?
B. The circuit contains a large capacitor

T7D11 (B)
Which of the following precautions should be taken when measuring circuit resistance with an ohmmeter?
B. Ensure that the circuit is not powered

T7D12 (B)
Which of the following precautions should be taken when measuring high voltages with a voltmeter?
B. Ensure that the voltmeter and leads are rated for use at the voltages to be measured

SUBELEMENT T8 – Modulation modes: amateur satellite operation; operating activities; non-voice and digital communications – [4 Exam Questions - 4 Groups]

T8A – Modulation modes: bandwidth of various signals; choice of emission type

T8A01 (C)
Which of the following is a form of amplitude modulation?
C. Single sideband

T8A02 (A)
What type of modulation is most commonly used for VHF packet radio transmissions?
A. FM

T8A03 (C)
Which type of voice mode is most often used for long-distance (weak signal) contacts on the VHF and UHF bands?
C. SSB

T8A04 (D)
Which type of modulation is most commonly used for VHF and UHF voice repeaters?
D. FM

T8A05 (C)
Which of the following types of emission has the narrowest bandwidth?
C. CW

T8A06 (A)
Which sideband is normally used for 10 meter HF, VHF, and UHF single-sideband communications?
A. Upper sideband

T8A07 (C)
What is an advantage of single sideband (SSB) over FM for voice transmissions?
C. SSB signals have narrower bandwidth

T8A08 (B)
What is the approximate bandwidth of a single sideband (SSB) voice signal?
B. 3 kHz

T8A09 (C)
What is the approximate bandwidth of a VHF repeater FM phone signal?
C. Between 10 and 15 kHz

T8A10 (B)
What is the typical bandwidth of analog fast-scan TV transmissions on the 70 centimeter band?
B. About 6 MHz

T8A11 (B)
What is the approximate maximum bandwidth required to transmit a CW signal?
B. 150 Hz

T8B - Amateur satellite operation; Doppler shift; basic orbits; operating protocols; transmitter power considerations; telemetry and telecommand; satellite tracking

T8B01 (C)
What telemetry information is typically transmitted by satellite beacons?
C. Health and status of the satellite

T8B02 (B)
What is the impact of using too much effective radiated power on a satellite uplink?
B. Blocking access by other users

T8B03 (D)
Which of the following are provided by satellite tracking programs?
A. Maps showing the real-time position of the satellite track over the earth
B. The time, azimuth, and elevation of the start, maximum altitude, and end of a pass
C. The apparent frequency of the satellite transmission, including effects of Doppler shift
D. All of these choices are correct

T8B04 (D)
What mode of transmission is commonly used by amateur radio satellites?
A. SSB
B. FM
C. CW/data
D. All of these choices are correct

T8B05 (D)
What is a satellite beacon?
D. A transmission from a satellite that contains status information

T8B06 (B)
Which of the following are inputs to a satellite tracking program?
B. The Keplerian elements

T8B07 (C)
With regard to satellite communications, what is Doppler shift?
C. An observed change in signal frequency caused by relative motion between the satellite and the earth station

T8B08 (B)
What is meant by the statement that a satellite is operating in mode U/V?
B. The satellite uplink is in the 70 centimeter band and the downlink is in the 2 meter band

T8B09 (B)
What causes spin fading of satellite signals?
B. Rotation of the satellite and its antennas

T8B10 (C)
What do the initials LEO tell you about an amateur satellite?

C. The satellite is in a Low Earth Orbit

T8B11 (A)
Who may receive telemetry from a space station?
A. Anyone who can receive the telemetry signal

T8B12 (C)
Which of the following is a good way to judge whether your uplink power is neither too low nor too high?
C. Your signal strength on the downlink should be about the same as the beacon

T8C – Operating activities: radio direction finding; radio control; contests; linking over the internet; grid locators

T8C01 (C)
Which of the following methods is used to locate sources of noise interference or jamming?
C. Radio direction finding

T8C02 (B)
Which of these items would be useful for a hidden transmitter hunt?
B. A directional antenna

T8C03 (A)
What operating activity involves contacting as many stations as possible during a specified period?
A. Contesting

T8C04 (C)
Which of the following is good procedure when contacting another station in a radio contest?
C. Send only the minimum information needed for proper identification and the contest exchange

T8C05 (A)
What is a grid locator?
A. A letter-number designator assigned to a geographic location

T8C06 (B)
How is access to some IRLP nodes accomplished?
B. By using DTMF signals

T8C07 (D)
What is meant by Voice Over Internet Protocol (VoIP) as used in amateur radio?
D. A method of delivering voice communications over the internet using digital techniques

T8C08 (A)
What is the Internet Radio Linking Project (IRLP)?
A. A technique to connect amateur radio systems, such as repeaters, via the internet using Voice Over Internet Protocol (VoIP)

T8C09 (D)
How might you obtain a list of active nodes that use VoIP?
A. By subscribing to an on line service
B. From on line repeater lists maintained by the local repeater frequency coordinator
C. From a repeater directory
D. All of these choices are correct

T8C10 (D)
What must be done before you may use the EchoLink system to communicate using a repeater?
D. You must register your call sign and provide proof of license

T8C11 (A)
What name is given to an amateur radio station that is used to connect other amateur stations to the internet?
A. A gateway

T8D – Non-voice and digital communications: image signals; digital modes; CW; packet radio; PSK31; APRS; error detection and correction; NTSC; amateur radio networking; Digital Mobile/Migration Radio

T8D01 (D)
Which of the following is a digital communications mode?
A. Packet radio
B. IEEE 802.11
C. JT65
D. All of these choices are correct

T8D02 (A)
What does the term “APRS” mean?
A. Automatic Packet Reporting System

T8D03 (D)
Which of the following devices is used to provide data to the transmitter when sending automatic position reports from a mobile amateur radio station?
D. A Global Positioning System receiver

T8D04 (C)
What type of transmission is indicated by the term "NTSC?"
C. An analog fast scan color TV signal

T8D05 (A)
Which of the following is an application of APRS (Automatic Packet Reporting System)?
A. Providing real-time tactical digital communications in conjunction with a map showing the locations of stations

T8D06 (B)
What does the abbreviation "PSK" mean?
B. Phase Shift Keying

T8D07 (A)
Which of the following best describes DMR (Digital Mobile Radio)?
A. A technique for time-multiplexing two digital voice signals on a single 12.5 kHz repeater channel

T8D08 (D)
Which of the following may be included in packet transmissions?
A. A check sum that permits error detection
B. A header that contains the call sign of the station to which the information is being sent
C. Automatic repeat request in case of error
D. All of these choices are correct

T8D09 (C)
What code is used when sending CW in the amateur bands?
C. International Morse

T8D10 (D)
Which of the following operating activities is supported by digital mode software in the WSJT suite?
A. Moonbounce or Earth-Moon-Earth
B. Weak-signal propagation beacons
C. Meteor scatter
D. All of these choices are correct

T8D11 (C)
What is an ARQ transmission system?
C. A digital scheme whereby the receiving station detects errors and sends a request to the sending station to retransmit the information

T8D12 (A)
Which of the following best describes Broadband-Hamnet(TM), also referred to as a high-speed multi-media network?
A. An amateur-radio-based data network using commercial Wi-Fi gear with modified firmware

T8D13 (B)
What is FT8?
B. A digital mode capable of operating in low signal-to-noise conditions that transmits on 15-second intervals

T8D14 (C)
What is an electronic keyer?
C. A device that assists in manual sending of Morse code

SUBELEMENT T9 – Antennas and feed lines - [2 Exam Questions - 2 Groups]

T9A – Antennas: vertical and horizontal polarization; concept of gain; common portable and mobile antennas; relationships between resonant length and frequency; concept of dipole antennas

T9A01 (C)
What is a beam antenna?
C. An antenna that concentrates signals in one direction

T9A02 (A)
Which of the following describes a type of antenna loading?
A. Inserting an inductor in the radiating portion of the antenna to make it electrically longer

T9A03 (B)
Which of the following describes a simple dipole oriented parallel to the Earth's surface?
B. A horizontally polarized antenna
~~

T9A04 (A)
What is a disadvantage of the “rubber duck” antenna supplied with most handheld radio transceivers when compared to a full-sized quarter-wave antenna?
A. It does not transmit or receive as effectively

T9A05 (C)
How would you change a dipole antenna to make it resonant on a higher frequency?
C. Shorten it

T9A06 (C)
What type of antennas are the quad, Yagi, and dish?
C. Directional antennas

T9A07 (A)
What is a disadvantage of using a handheld VHF transceiver, with its integral antenna, inside a vehicle?
A. Signals might not propagate well due to the shielding effect of the vehicle

T9A08 (C)
What is the approximate length, in inches, of a quarter-wavelength vertical antenna for 146 MHz?
C. 19

T9A09 (C)
What is the approximate length, in inches, of a half-wavelength 6 meter dipole antenna?
C. 112

T9A10 (C)
In which direction does a half-wave dipole antenna radiate the strongest signal?
C. Broadside to the antenna

T9A11 (C)
What is the gain of an antenna?
C. The increase in signal strength in a specified direction compared to a reference antenna

T9A12 (A)
What is an advantage of using a properly mounted 5/8 wavelength antenna for VHF or UHF mobile service?
A. It has a lower radiation angle and more gain than a 1/4 wavelength antenna

T9B – Feed lines: types, attenuation vs frequency, selecting; SWR concepts; Antenna tuners (couplers); RF Connectors: selecting, weather protection

T9B01 (B)
Why is it important to have low SWR when using coaxial cable feed line?
B. To reduce signal loss

T9B02 (B)
What is the impedance of most coaxial cables used in amateur radio installations?
B. 50 ohms

T9B03 (A)
Why is coaxial cable the most common feed line selected for amateur radio antenna systems?
A. It is easy to use and requires few special installation considerations

T9B04 (A)
What is the major function of an antenna tuner (antenna coupler)?
A. It matches the antenna system impedance to the transceiver's output impedance

T9B05 (D)
In general, what happens as the frequency of a signal passing through coaxial cable is increased?
D. The loss increases

T9B06 (B)
Which of the following connectors is most suitable for frequencies above 400 MHz?
B. A Type N connector

T9B07 (C)
Which of the following is true of PL-259 type coax connectors?
C. They are commonly used at HF frequencies

T9B08 (A)
Why should coax connectors exposed to the weather be sealed against water intrusion?
A. To prevent an increase in feed line loss

T9B09 (B)
What can cause erratic changes in SWR readings?
B. A loose connection in an antenna or a feed line

T9B10 (C)
What is the electrical difference between RG-58 and RG-8 coaxial cable?
C. RG-8 cable has less loss at a given frequency

T9B11 (C)
Which of the following types of feed line has the lowest loss at VHF and UHF?
C. Air-insulated hard line

SUBELEMENT T0 – Electrical safety: AC and DC power circuits; antenna installation; RF hazards – [3 Exam Questions - 3 Groups]

T0A – Power circuits and hazards: hazardous voltages; fuses and circuit breakers; grounding; lightning protection; battery safety; electrical code compliance

T0A01 (B)
Which of the following is a safety hazard of a 12-volt storage battery?
B. Shorting the terminals can cause burns, fire, or an explosion

T0A02 (D)
What health hazard is presented by electrical current flowing through the body?
A. It may cause injury by heating tissue
B. It may disrupt the electrical functions of cells
C. It may cause involuntary muscle contractions
D. All of these choices are correct

T0A03 (C)
In the United States, what is connected to the green wire in a three-wire electrical AC plug?
C. Equipment ground

T0A04 (B)
What is the purpose of a fuse in an electrical circuit?
B. To interrupt power in case of overload

T0A05 (C)
Why is it unwise to install a 20-ampere fuse in the place of a 5-ampere fuse?
C. Excessive current could cause a fire

T0A06 (D)
What is a good way to guard against electrical shock at your station?
A. Use three-wire cords and plugs for all AC powered equipment
B. Connect all AC powered station equipment to a common safety ground
C. Use a circuit protected by a ground-fault interrupter
D. All of these choices are correct

T0A07 (D)
Which of these precautions should be taken when installing devices for lightning protection in a coaxial cable feed line?
D. Mount all of the protectors on a metal plate that is in turn connected to an external ground rod

T0A08 (A)
What safety equipment should always be included in home-built equipment that is powered from 120V AC power circuits?
A. A fuse or circuit breaker in series with the AC hot conductor

T0A09 (C)
What should be done to all external ground rods or earth connections?
C. Bond them together with heavy wire or conductive strap

T0A10 (A)
What can happen if a lead-acid storage battery is charged or discharged too quickly?
A. The battery could overheat, give off flammable gas, or explode

T0A11 (D)
What kind of hazard might exist in a power supply when it is turned off and disconnected?
D. You might receive an electric shock from the charge stored in large capacitors

T0B – Antenna safety: tower safety and grounding; erecting an antenna support; safely installing an antenna

T0B01 (C)
When should members of a tower work team wear a hard hat and safety glasses?
C. At all times when any work is being done on the tower

T0B02 (C)
What is a good precaution to observe before climbing an antenna tower?
C. Put on a carefully inspected climbing harness (fall arrester)and safety glasses

T0B03 (D)
Under what circumstances is it safe to climb a tower without a helper or observer?
D. Never

T0B04 (C)
Which of the following is an important safety precaution to observe when putting up an antenna tower?
C. Look for and stay clear of any overhead electrical wires

T0B05 (C)
What is the purpose of a gin pole?
C. To lift tower sections or antennas

T0B06 (D)
What is the minimum safe distance from a power line to allow when installing an antenna?
D. Enough so that if the antenna falls unexpectedly, no part of it can come closer than 10 feet to the power wires

T0B07 (C)
Which of the following is an important safety rule to remember when using a crank-up tower?
C. This type of tower must not be climbed unless retracted or mechanical safety locking devices have been installed

T0B08 (C)
What is considered to be a proper grounding method for a tower?
C. Separate eight-foot long ground rods for each tower leg, bonded to the tower and each other

T0B09 (C)
Why should you avoid attaching an antenna to a utility pole?
C. The antenna could contact high-voltage power lines

T0B10 (C)
Which of the following is true when installing grounding conductors used for lightning protection?
C. Sharp bends must be avoided

T0B11 (B)
Which of the following establishes grounding requirements for an amateur radio tower or antenna?
B. Local electrical codes

T0B12 (C)
Which of the following is good practice when installing ground wires on a tower for lightning protection?
C. Ensure that connections are short and direct

T0B13 (B)
What is the purpose of a safety wire through a turnbuckle used to tension guy lines?
B. Prevent loosening of the guy line from vibration

T0C - RF hazards: radiation exposure; proximity to antennas; recognized safe power levels; exposure to others; radiation types; duty cycle

T0C01 (D)
What type of radiation are VHF and UHF radio signals?
D. Non-ionizing radiation

T0C02 (B)
Which of the following frequencies has the lowest value for Maximum Permissible Exposure limit?
B. 50 MHz

T0C03 (C)
What is the maximum power level that an amateur radio station may use at VHF frequencies before an RF exposure evaluation is required?

C. 50 watts PEP at the antenna

T0C04 (D)
What factors affect the RF exposure of people near an amateur station antenna?
A. Frequency and power level of the RF field
B. Distance from the antenna to a person
C. Radiation pattern of the antenna
D. All of these choices are correct

T0C05 (D)
Why do exposure limits vary with frequency?
D. The human body absorbs more RF energy at some frequencies than at others

T0C06 (D)
Which of the following is an acceptable method to determine that your station complies with FCC RF exposure regulations?
A. By calculation based on FCC OET Bulletin 65
B. By calculation based on computer modeling
C. By measurement of field strength using calibrated equipment
D. All of these choices are correct

T0C07 (B)
What could happen if a person accidentally touched your antenna while you were transmitting?
B. They might receive a painful RF burn

T0C08 (A)
Which of the following actions might amateur operators take to prevent exposure to RF radiation in excess of FCC-supplied limits?
A. Relocate antennas

T0C09 (B)
How can you make sure your station stays in compliance with RF safety regulations?
B. By re-evaluating the station whenever an item of equipment is changed

T0C10 (A)
Why is duty cycle one of the factors used to determine safe RF radiation exposure levels?
A. It affects the average exposure of people to radiation

T0C11 (C)
What is the definition of duty cycle during the averaging time for RF exposure?
C. The percentage of time that a transmitter is transmitting

T0C12 (A)
How does RF radiation differ from ionizing radiation (radioactivity)?
A. RF radiation does not have sufficient energy to cause genetic damage

T0C13 (C)
If the averaging time for exposure is 6 minutes, how much power density is permitted if the signal is present for 3 minutes and absent for 3 minutes rather than being present for the entire 6 minutes?
C. 2 times as much

END OF Questions

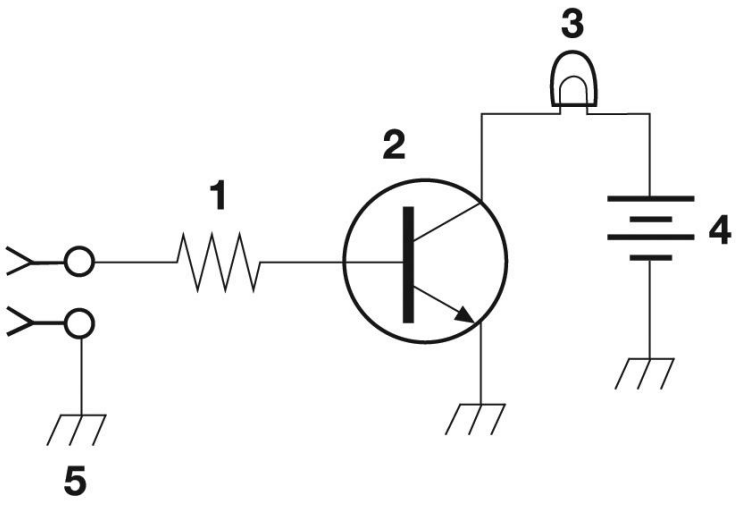

Figure T-1

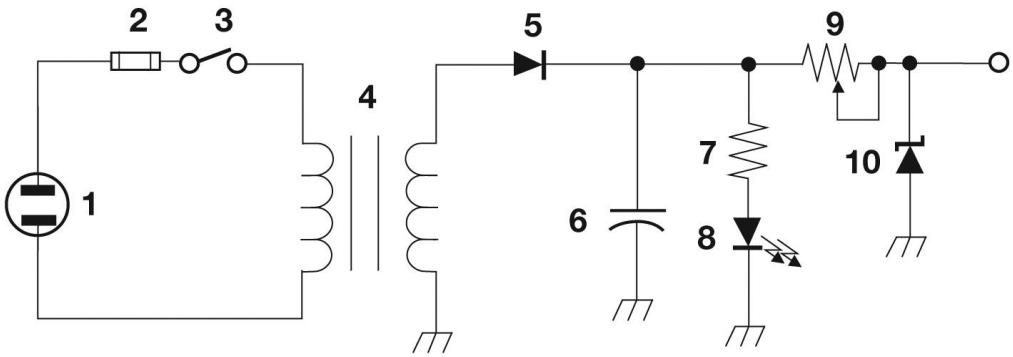

Figure T-2

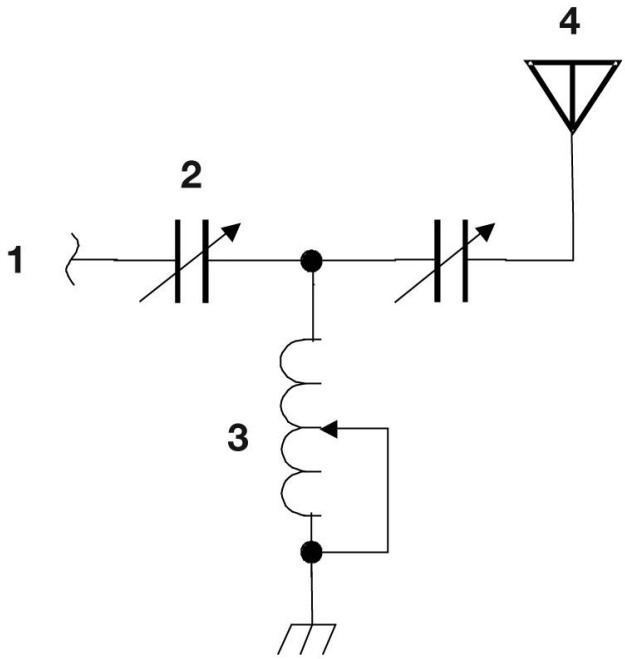

Figure T-3